May 2002

FEEDBACK

The **OFFICIAL** Newsletter

of the

Georgian Bay Amateur Radio Club Inc.

P.O. Box 113, Owen Sound, Ontario N4K 5P1

GBARC Meetings

are held on the 4th Tuesday of every month except July and August in our CLUBHOUSE, Unit 6 Rockford Plaza, Rockford On. 5km S of Owen Sound.7:30 p.m.

Breakfast Anyone?

Any Saturday 9:00 a.m., a mile south of rockford at the 6 & 10..west side of road...

Nets

80 metre net on Sunday at 9:30 a.m. on 3.783 Mhz. Two metre net on Thursday at 9 p.m. on VE3OSR 146.94-Mhz.

Submissions

are always welcome.
Send them to
Tom ve3tsa@rac.ca

This Month

1st Annual
GBARC Fleamarket
June23rd
(Field Day)

BILLY BISHOP HERITAGE DAY

Oscillator Building Blocks

Geomagnetic Data

OUR NEW NEWSLETTER EDITOR

GBARC Mail Box

NEXT MEETING MAY 28TH

President
Bernie VE3BQM

Vice-President
BobVE3XOX

Secretary
SusanVE3TLK

Treasurer
Bob VE3LKD

Newsletter Team Editor
TomVE3TSA

Newsletter Team Mailing
Tom VE3CVL

Minutes of April 23, 2002 Meeting

The Meeting was called to order and everyone was welcomed by President Bernie VE3BQM at 7:30 p.m.
The Treasurer's Report was given by Bernie BQM.

Old Business

Bernie BQM explained the clubhouse rent situation to the members.
June 2 is "Billy Bishop Heritage Day". Our role in the area of communications was explained and volunteers were asked for. Gene IJD has obtained a tent for the day.

Field Day will be June 29 & 30 at the clubhouse.

Membership cards were given out.

Breakfasts will be held at the clubhouse on the Saturday following the meeting. They will begin at 9:00 a.m. Bob XOX will organize the next breakfast. The menu will be a "breakfast surprise".

Jim CJM and Chris MUM were welcomed back from their Bahamas trip. They will tell us about their experiences at a future meeting. They expressed their thanks to Bernie BQM and others for their QSO's as it was their only real form of communication with home.

New Business

Jim Rowe of CFASE will be invited to join us and make a presentation at the May 28 meeting.
The elections nomination committee was headed by Barry VA3 WBG. Bernie BQM encouraged all members to run in the election. The following members have agreed to let their name stand for a position on the executive.

President Vice President
Bernie BQM Bob XOX
Gary VA3FV

Secretary Treasurer
Susan TLK Bob LKD

Newsletter
Technical Director
Barry VA3WBG Stan ZON
Walter FFN
Gary VA3FV

Examiner Auditor
Joe JNA Dave

DXO

Tom VE3TSA will be giving up the position of newsletter editor as of the June meeting. Thank you Tom for all of your hard work over the years. It has been greatly appreciated by the club members. Please help out the new newsletter editor by supplying information e.g. articles, logs, etc.

Please make sure we have your correct email on record to send messages, newsletters etc.

Packet is no longer in service.

A "Flea Market" for fundraising will be held on May 25. A 10% fee will be charged. There will be a BBQ lunch at which hamburgers will be sold. (Note: the revised date for this event is June 29)

On a Saturday in September (date to be announced) there will be public tours of the CFOS radio station for anyone wishing to go.

Bob McKay was the winner of $21.in the 50/50 draw.

Motion to adjourn the meeting was made by Joe JNA and seconded by Jack DTS at 8:40 p.m.

GBARC Field Day & FLEAMARKET

June 23rd

Keep Saturday June 23rd open for the first annual GBARC Field day, Fleamarket and barbeque. The fleamarket will be held at the Clubhouse at 9am. If you are participating in the fleamarket, most of the space is tailgate and even that isn't a lot. **Setup at 8am** After the fleamarket we will operate field day from our clubhouse. And as usual our pot luck will be around 5pm or so, A to M bring a main dish, N to Z bring a desert or salad. Contact VE3TSA for fleamarket fee information and to book your space.

Billy Bishop Heritage Day

GBARC been invited to provide communication assistance at the upcoming Billy Bishop Heritage Day on Sunday June 2nd, 2002. We will have a central communications point and portables on foot around the site and provide assistance in the event of an emergency like we've done many times in the past. For any that would like to help out, the admission is free. I'm sure this will be a nice event to participate in as they plan military re-enactments, displays of historic aircraft, parachute drops, museum exhibits, military bands, children's activities and fly-bys. Please check out the website www.billybishop.org for more information. If you would like to volunteer please send an e-mail here or we will see you at the **meeting on May 28th**. If we get enough participants then we can set up a schedule and spread the coverage throughout the day. So far we have

VE3HXX, SEG, XOX, TSA, TLK, LKD, BQM, CVL, FFN, IJD, USI, VA3DRB, WBG, CJM, MUM, BMQ, ZON, TWI, FV, AEG & ILT. (Welcome to Bennie BMQ from our latest class) There is a bit of setup required Friday May 31st evening. The following Sunday, June 2nd, will have 3 shifts, 8am-noon, 12 till 4pm and 4 to 7pm. Take your pick, any or all. Bring a lawn chair, even if it just sits in the trunk, and your own snacks to suit, free water will be available so I hear. Since we can't depend on the weather, better bring a heavier coat, umbrella etc. and of course, a 2 mtr handheld.

OSCILLATOR BUILDING BLOCKS

Oscillators are everywhere in electronics. They are a basic building block upon which the whole structure of electronics and computers is based. This article looks at the 3 basic types of multivibrators (multivibrator). They are designed to have zero, one or two stable states; the astable (the prefix 'a' means 'not') or free running multivibrator, the monostable multivibrator (also called the one-shot) and the flip-flop or bistable ('bi' means 2, bistable means 2 stable states) .

In the flip-flop multivibrator a trigger pulse or control signal is required to change from one state to the other. multivibrator's use regenerative (positive) feedback; the active components present within the circuit operate as switches being alternately cutoff or driven into saturation. These circuits have now largely been replaced by timer ICs like the 555.

However, a basic understanding of them is still essential since they are still used in many circuits. This builds each of these three circuits and allows you to experiment with them. To understand how these circuits work will also make sure you have an understanding of resistors, capacitors, RC characteristics, the transistor as a switch and the light emitting diode (LED).

CIRCUIT DESCRIPTION

Most basic electronic text books give a review of these three multivibrator's. We suggest you use a text book as well as our explanations below in order to get a good understanding of these basic topics.

When the 9V battery is connected, the astable multivibrator should flash from one LED to the other. A diode on the input protects the multivibrator’s if the battery is connected wrongly. One LED should be on for about twice the time of the other. The LED in the monostable multivibrator should remain off. In the RS flip flop one LED should turn on and stay on. Connect some long leads, at least 6 inches to the R and S inputs. Play with touching the flying wires to the trigger, set & reset points. Try to follow what happens on the circuit diagram when you touch a lead. What you see is all to do with transistors acting as switches and capacitors charging and discharging with a time constant determined by an R and a C in the charge path. You cannot do any harm to the components by playing with the flying wires. If you have access to a multimeter look at the changes of the base/emitter voltages of the transistors as you touch trigger, set & reset.

1. The Flip Flop.

Computer memory elements (the group of circuit components in a memory IC which stores each 'bit' - binary digit) use the flip-flop principal. Play with the flying wires onto the set and reset wires. You can very quickly see what this circuit does; it remembers information about which was the last LED to be make to be turned on or off.

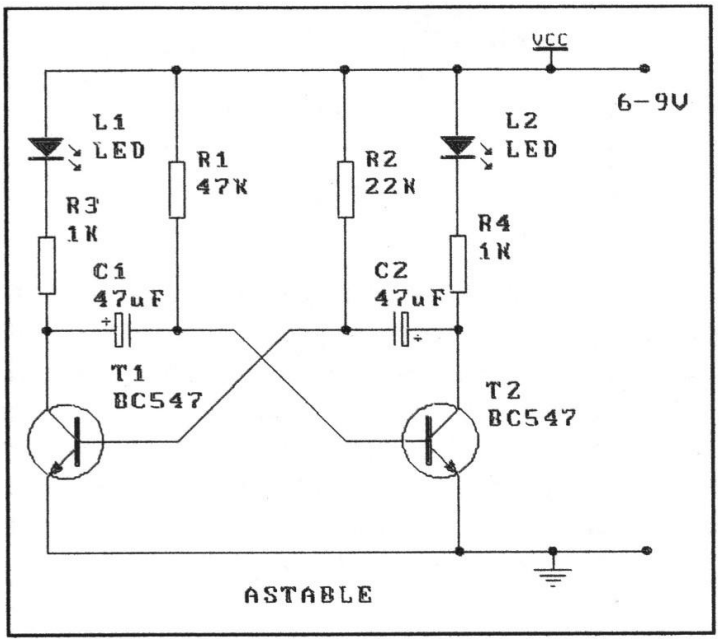

Of course, you have to define a convention: which flying wire you are using, which pin is called what, etc. When the power is connected to the circuit one or other of the two transistors will turn on. Both transistors will try to turn on as the base of each tries to go high. But due to slight differences in component values one will be quicker than the other. Suppose it is T5. This means that T5 collector voltage is low (below .65V), which means that the base of T6 is also low (since the two are connected) and T6 is off. Now when the set lead is touched by the positive rail, T6 is turned on because its base potential is raised over 0.6V. So T6 turns on and its collector potential drops which drops the base potential of T5 to below 0.65V and so T5 turns off. The circuit has flipped into its other state. Touch the reset with the positive lead and the circuit flops back to T5 turned on again. We called one LED the set, and the other reset but these names are quite arbitrary. The flying negative lead also causes the LED's to turn on and off but in the opposite way to the sequence caused by the positive flying lead. Study what is happening with the schematic in front of you.

2. The Monostable Multivibrator.

Now we introduce an RC network into the flip flop circuit just described. An electrolytic capacitor replaces one of the base bias resistors of the flip flop circuit. And the biasing which was supplied by this resistor is provided by a 56K resistor to the positive rail. When the power is turned on the circuit will settle into a stable state in which T4 is on and T3 is off. Use a multimeter to measure the base/emitter and collector/emitter voltages of T3 & T4 to show this. The capacitor will have about 6V across it. We have put on the schematic above the voltages we measured. It is the capacitor in the circuit which determines that T3 will be off, and T4 will be on in its stable state.

A high applied to the trigger point turns T3 on. Then after a few seconds T3 turns off and returns to the stable state. What has happened is that as soon as the trigger goes high, T3 is turned on and the positive end of the capacitor is taken to zero. This immediately drags the negative end of the capacitor to below zero potential. This turns T4 off since the negative of the capacitor is connected to the base of T4. The LED turns on because T3 is on. But then after the pulse is removed C3 starts to charge up with a time constant determined by C3 and R1. Then when the voltage on the negative end of C3 reaches 0.65V, T4 starts to turn on, T3 turns off and so does the LED. The state is then stable again.

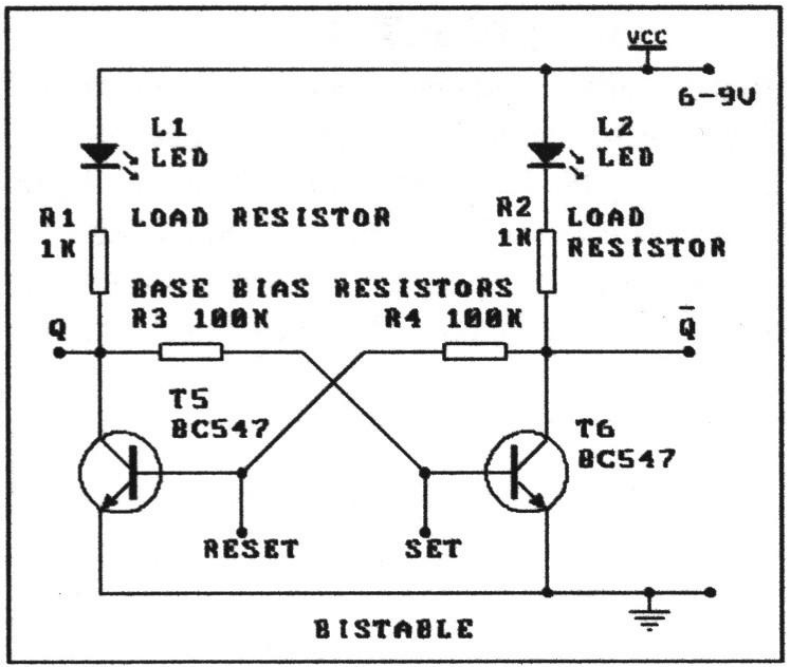

Play with this over & over until you understand what is happening. A low pulse delivered to the trigger point when the LED is off does nothing because it is already almost at ground.

3. The Astable or Free Running Multivibrator.

In this multivibrator we replace the second base bias resistor by an RC network. You can think of it as two monostable multivibrator's connected together; the output of one feeds the input of the other First one LED is turned on, then the other. The output is a square wave. Its mark/space ratio and its frequency is determined by the values of the R & C components. The time that the collector of T2 is low (& T1 high) is determined by the time constant R2 & C2. Similarly, the time the collector of T1 is low (& T2 high) is determined by the time constant of R1 & C1. We made R1 about twice the value of R2 to highlight this. The time constant is: t=0.693 RC. Work them out for yourself to check what you observe.

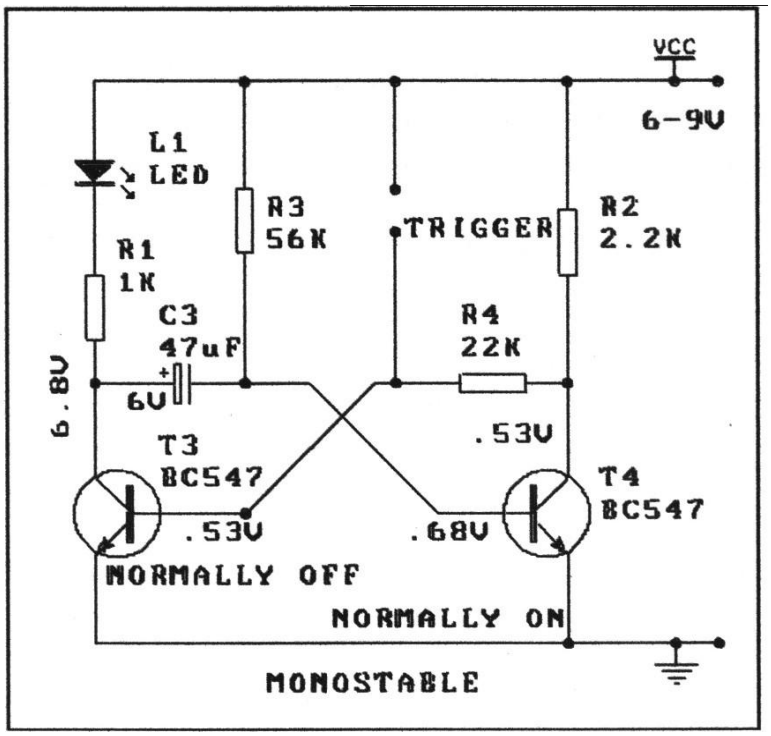

WHAT TO DO IF IT DOES NOT WORK

Poor soldering is the most likely reason that the circuit does not work. Check all solder joints carefully under a good light. Next check that all components are in their correct position on the PCB. Thirdly, follow the track with a voltmeter to check the potential differences at various parts of the circuit particularly across the base, collector and emitter of the two transistors. Is the battery OK? Are the LEDs in the correct way?

WHAT TO LEARN FROM THIS

It is quite amazing when you think about it - you apply a constant voltage to a simple circuit consisting of 2 transistors, 2 capacitors and 4 resistors and what is produced is an oscillation. Just alter the component values of the astable multivibrator and you have a square wave generator for whatever frequency and mark/space ratio you wish. Try changing some of the resistor and capacitor values. Try to work out the RC values and correlate to the times the LED's stay illuminated.

See our website at **http://kitsrus.com**

COMPONENTS

COMPONENTS	
Resistors 5%, 1/4W:	
1K brown black red	5
2K2 red red red	1
22K red red orange	2
100K brown black yellow	2
56K green blue orange	1
47K yellow violet orange	1
47uF electrolytic capacitor	3
BC547 small signal transistor	6
5mm bright red LED	5
1N4004	1
Kit 9 printed circuit board	1
9V battery snap	1

Geomagnetic Data

The study of geomagnetism is one of the oldest of the geophysical sciences. Since before the publication of Gilbert's De Magnete in 1600, people have sought to solve the mysteries of the Earth's magnetic field.

The **N**ational **G**eophysical **D**ata **C**enter maintains extensive archives of geomagnetic data to further the understanding of Earth magnetism. Answers to some commonly asked questions can be found at our FAQ site.

Geomagnetic data at NGDC include surface, ocean, airborne and satellite measurements, as well as models of the main field and its secular change, and models of the space - earth environment. NGDC participates in national and international projects involving the preparation of regional and global geomagnetic models and local and global indices of geomagnetic activity. Data on the Earth's ancient magnetic field are available from archeomagnetic and paleomagnetic measurements. Please see additional information on geomagnetism.

http://www.ngdc.noaa.gov/seg/potfld/geomag.shtml

Our NEW Newsletter Editor

Well folks, I have decided to take a break from producing Feedback but I will still be doing the web page unless someone would like to take a crack at that too. Luckily we have an eager volunteer for our new newsletter editor, Barry VA3WBG, whom I think will do a fine job. He already has an interest in computers and software so it won't be too much of a trial. Look for Barry's first issue of Feedback in September. As always, a big thanks to Tom VE3CVL for all the work he has done duplicating and mailing out the newsletter.....73 VE3TSA

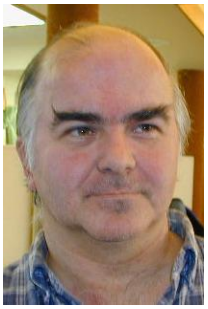

From The Mailbox

ZEROBEAT

THE **BRUCE AMATEUR RADIO CLUB NEWSLETTER**

IS NOW POSTED 73 DE JIM COVERLEY VE3OVV

http://www.brucearc.on.ca

When in Barrie stop in at the **Barrie Amateur Radio Club Meeting**

Georgian college, Rowntree Theatre
Date: TBA Time: 7:30 PM
73 de ken ve3kpp

Two IRLP STORIES

from Bob VE3XOX

Submitted by Klaus - VE3KR
February 9th, 2001

A friend emailed the irlp web site to me in early November 2000 and said I should take a look at this new internet linking system.

I read all there was on the web page, emailed Dave Cameron on a few questions and put in my order. I also sent off the irlp web address to my friend in the Island of Domincia J73CI, and suggested he may want to give this link a try. I envisioned having a link between his repeater system and mine up here in Toronto Canada. Sounded impossible but ended up to be true.

I had never touched Linux and was a bit leery once I found out that it required a linux computer to operate the software. Anyway I prodded along following Dave Camerons 17 page install manual. Other than having a small setback for a few days trying to figure out a disk partitioning problem, the install went in in about 3/4 of a hour.

I wired the link radio to the irlp interface and it was ready.

On Jan 4th I carried the pc and radio over to my friends place that was to host the pc since he had the high speed internet cable connection. We entered the ip address and did a few other adjustments in the network card and contacted Dave Cameron via email that we were ready for the software install.

As my friend Dave, VE3VSM and I sat on the floor in front of the pc talking, all of a sudden I noticed the harddrive light flashing. Hey, there is something going on in there excitedly I said!

We could not believe it, Dave was already connected and downloading the rest of the software. It took another 15 minutes or so and all of a sudden we heard Dave's voice coming out the the pc speaker saying, CAN YOU HEAR ME!

Wow , it worked.

We were ecstatic and talked back to Dave on the radio. We were on the air.

Man that was an easy install.

Yes, the "Nature Isle, Dominica" also has their node running as of Jan. 24th and I communicate daily with my friends in the sunny Isle while I am here in Toronto under snow and slush.

IRLP is a great new system that is taking Hams to the forefront of technology and we cannot and should not ignore it's presence.

Klaus Rung VE3KR
Happy owner of two IRLP Nodes.

-

Submitted by John - KI4RO
February 9th, 2001

About two months ago I was making my daily trek into work at about 1500 local time here in Virginia and monitoring the Network Engineers Repeater Association (NERA) system here in the Washington DC metropolitan area when I heard Karen, VE3XCK access our IRLP node. As it turns out Karen teaches second grade and she and her class were working on geography that day. I had the distinct pleasure of chatting with a couple of the young students and answering a few questions about my location and what kind of car I was driving, etc. The real thrill for me though was when Karen indicated that they had to wrap things up and get ready for the bus and she had the entire class bid me 73 in unison.